VOTRONIC

Installation and Operating Manual

LCD-Thermometer/Clock S No. 1253

The 3-fold thermometer with crystal clock is purpose-build for the mounting in caravans, boats and intervention vehicles.

Please read the mounting instructions and operating manual including the safety regulations completely prior to starting connection and start-up.

The VOTRONIC LCD-Thermometer /Clock S is equipped with a large LC display, which ensures very good legibility, even from a distance. The integrated background illumination guarantees a high-contrast representation, even with unfavourable lighting conditions.
The thermometer measures not only the room temperature, but also the outside temperature is measured by the supplied external temperature sensor. The third measuring input can be used for control of refrigerator boxes or heat boxes. The third temperature sensor is separately available as accessory. The measuring ranges cover -30 °C to +70 °C with a resolution of 0.1 °C.
The precise crystal clock shows minutes and hours (24 hours format), a flashing colon for operational check and the weekday in the lower row. The clock is equipped with a power reserve. Thus, it continues working also at a short-time voltage loss.
The unit distinguished by low current consumption, and it is suitable for 12 V as well as 24 V board mains supply.
For fire-fighting vehicles and intervention vehicles the second measuring input can be used for automatic activation of the clock and of its illumination.
Appearance and dimensions of the display are perfectly adapted to the VOTRONIC modular system. The VOTRONIC modular system includes tank display units (fresh and sewage water as well as feces), the LCD series (solar computer, battery computer, ammeter and voltmeter), as well as switch and fuse panels.

Installation and Connection:

Choose a well visible and easily accessible location in the living area for installation of the LCD thermometer/ clock. Direct sun radiation should be avoided, since the built-in temperature sensor might heat up strongly, and a measurement of the room temperature by the module is not possible any longer.
The rear cutout opening should be covered with electrically nonconducting material to ensure efficient protection of the electronic system and full utilization of the storage space, which might be located behind.

Installation place for the external measuring sensor:
If the external sensor shall be used as outside temperature sensor, direct sun radiation or heat radiation on the engine block/engine compartment/radiator preferably should be avoided.
If the measuring input 3 is used for control of the refrigerator box or heat box, the external temperature sensor (required accessory, order No. 2001) should be placed at average height of the container.

Terminals:

Connection +Batt., -Batt.
This connection is used for the current supply to the unit. The +Batt. cable is to be **protected** by means of a **fuse 3 A**. The cable cross-sections should be 0.75 mm², at least.

Sensor connection
The temperature sensors are connected to the connections „–Sens.“ and „+Sens1“, or „–Sens.“ and „+Sens2“. The sensors do not have a defined polarity. For better identification, we recommend to connect the black wire to „–Sens.“ and the red wire to „+Sens.“.

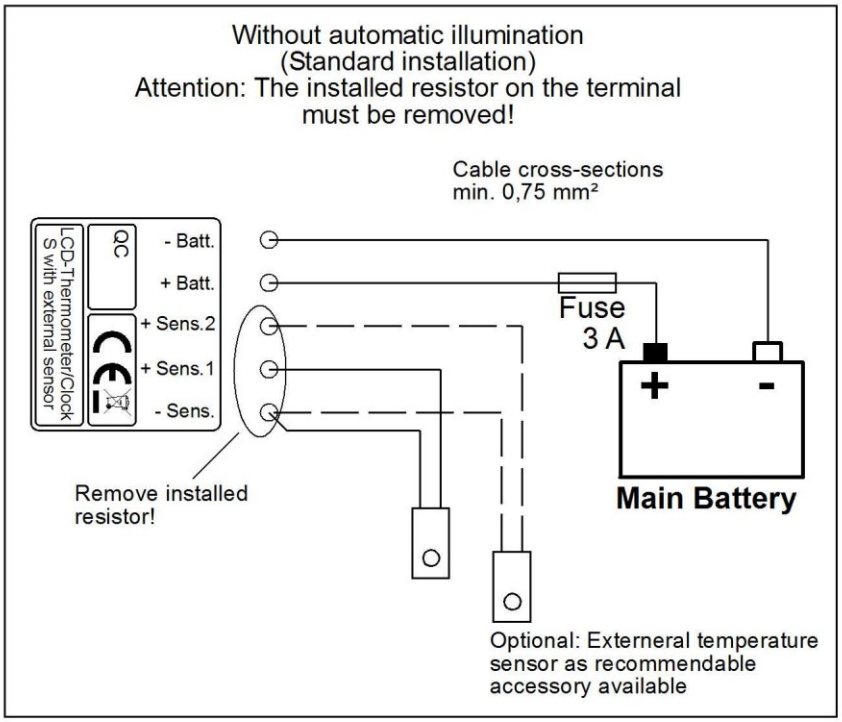

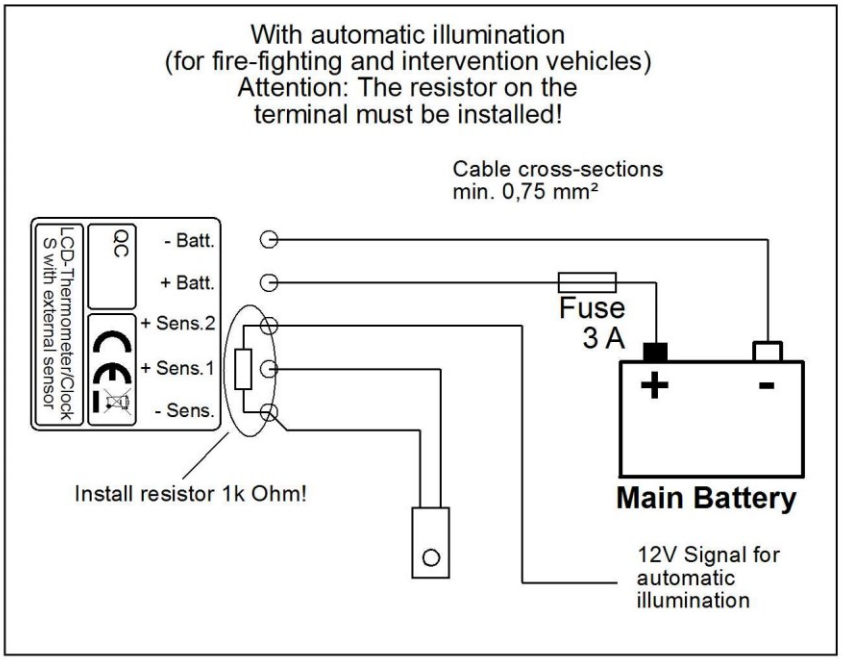

The resistor, which had been connected in the factory, and which is located between the terminals „–Sens.“ and „+Sens2“ must be removed in any case, since the connection „+Sens2“ is used for automatic activation of the illumination.

Connection control input illumination:
The second measuring input can be used for automatic activation of the clock and of its illumination.
Connect the supplied resistor 1 kΩ between the terminals „-Sens.“ and „+Sens.2“, and connect a control voltage to the terminal „+Sens.2“.
In this case, connection and use of a second temperature sensor is not possible.
The use of the second input as control input for the illumination must be set in the menu. The illumination of the display is still active for 3 minutes after disconnection of the signal. Even without control signal, the display can be operated as usual.

Operation:

Key 1: Next page of display.
Adjustment of illumination (3 s)

Key 2: Previous page of Display.
Adjustment of illumination (3 s)

Key 3: Display on/off.
Settings (3 s)

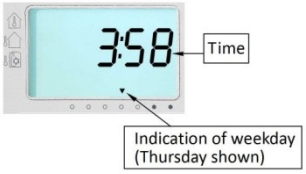

Activation, Deactivation

The unit is optimized for extremely current saving operation and offers three operation modes.

Stand-by: During stand-by mode the display is empty.

Display with and without illumination: As soon as the unit is operated, the display illumination will be switched-on and will remain activated for 3 minutes. If there is no operation during this time, the illumination will be switched-off automatically. The display continues showing the same data. The display illumination is reactivated by pressing any key. The proper function of the key will be effected by pressing the key a second time.

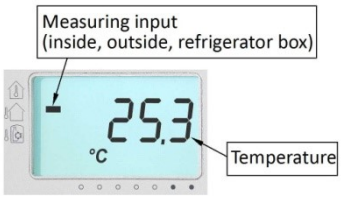

Adjustment of the brightness:
Adjustment of the display brightness is effected in switched-on condition and by pressing and holding the keys 1 and 2 for more than 3 seconds until the desired brightness is achieved.

Displays clock and thermometer:
The displays of clock and thermometer can be scrolled forwards and backwards by means of the keys 1 and 2 as shown below.

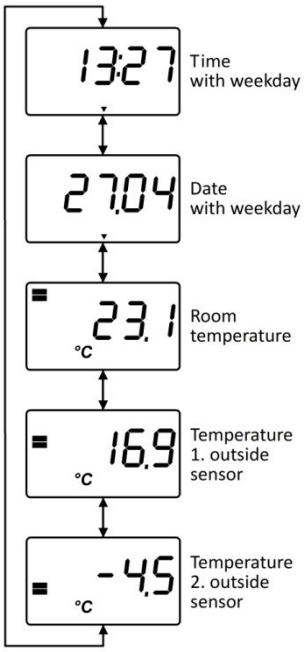

Time:
The current time is displayed. The colon between hours and minutes is flashing every second.

Date:
The display of the date can be recognized by the separating point between day and month.

Weekday:
During display of time or date, a marking arrow is shown at the lower edge of the display. This arrow shows the weekday. From the left to the right: Monday to Sunday.

Temperatures:
The inside and outside (sens. 1) temperatures are displayed, and, if connected, the temperature of the refrigerator (sens. 2).
The markings at the left screen edge show the corresponding sensor.
If sensor 2 had not been connected, two minus signs (-.- °C) are displayed.
If this input had been deactivated in the menu, its display will be jumped.

Settings:

The menu for settings of the clock or of other functions can be called, if the display switched-on and key 3 is pressed and hold for more than 3 seconds until “Set” is flashing.

In the menu, key 2 is used to save the corresponding setting and to jump to the next menu item.

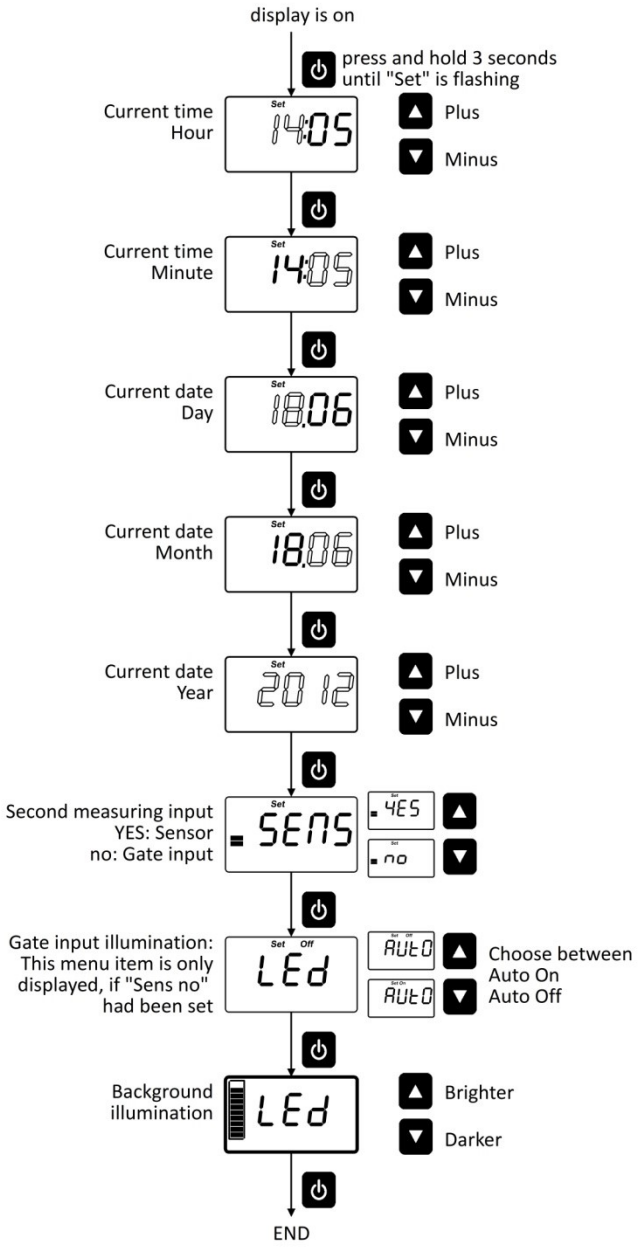

Setting of the **clock**:

- Set the current hour using key 1 and 2.
- Acknowledge using key 3. The display changes to the minutes setting.
- Set the current minutes using key 1 and 2.
- Acknowledge using key 3. The display changes to the date.

- Set the current day using key 1 and 2.
- Acknowledge using key 3. The display changes to the month.
- Set the current month using key 1 and 2.
- Acknowledge using key 3. The display changes to the year.
- Set the year using key 1 and 2.
- Acknowledge using key 3.

Setting of the second measuring input:
If the automatic activation of the illumination shall be used, set the second measuring input to „SENS no“.
Thus, the temperature measurement of the 2nd input is deactivated.

The menu item for the setting of the automatic illumination is only displayed, if the 2nd measuring input had been set to „SENS no“.
„LED“ and „AUTO“ are flashing alternately. Either „on“ or „off“ are shown at the upper edge of the display.

- on: the illumination will be switched-on by the control input.
- off: the illumination will not be switched-on automatically.

Adjustment of the background illumination:
The background illumination can be adapted from bright to completely dark in steps of 10 % according to the requirements.

General Information:

Cleaning:
We recommend to use a damp microfibre cloth with pure water or, if required, with water with a few soap.
Take care, that no liquid flows along the display screen or along the edges of the front panel.

⚠ Never use solvents, aggressive household cleaners, and scratching or abrasive agents or objects to clean the front panel and particularly the display itself.

Trouble-shooting:

No display at all:

a) Reverse battery: Check!
b) Fuse defective
c) Battery is totally discharged, below 7 Volts: Recharge immediately!
d) Connection cable is interrupted, damaged, or it is not inserted: Check!

„Hieroglyphs“ on the display:

a) The internal check programs of the unit have found an (memory) error:
Withdraw the cable connector for 10 seconds. After that, an initial start-up is to be executed as described above.

Display: Err:

a) Short-circuit at one of the temperature sensors.
b) Resistor between the terminals „+Sens.2“ and „-Sens.“ had not been removed, and the input shall be used for temperature measurement, or it shall not be used at all. → Remove the resistor.

Display: -.-:

a) Temperature sensor had not been connected or cables are interrupted.

Safety Regulations and Appropriate Application

The LCD Thermometer / Clock S had been designed according to the valid safety regulations.
Appropriate application is restricted to:

1. **Operation with 12 V / 24 V direct voltage (board mains supply nominal voltage) in fixed installed systems.**
2. **Technically faultless condition.**
3. **Installation in a well-ventilated room, protected from rain, humidity, dust, aggressive battery gas, as well as in an environment being free from condensation water.**
4. **With a rear insulating cover of the display unit.**

- **Never use the unit at locations where the risk of gas or dust explosion exists!**
- Open-air operation of the unit is not allowed.
- Cables are always to be laid in such a way that damage is excluded. Observe to fasten them tightly.
- Never lay 12 V (24 V) cables and 230 V mains supply cables into the same cable conduit (empty conduit).
- Check live cables or leads periodically for insulation faults, points of break or loosened connections. Occurring defects must be remedied immediately.
- The unit is to be disconnected from any connection prior to execution of electrically welding or work on the electric system.
- If the non-commercial end-user is not able to recognize the characteristic values being valid for a unit or the regulations to be observed, a specialist is always to be consulted.
- The user/buyer is obliged to observe any construction and safety regulations.
- **The unit is not equipped with parts, which can be replaced by the user.**
- Non-observance may result in injury or material damage.
- **Never use solvents or aggressive household cleaners for cleaning of the display!**
- The manufacturer's warranty is 60 months from delivery.
- Improper use, operation outside the technical specifications, improper operation or third-party intervention will void the warranty or manufacturer's guarantee. No liability is accepted for any resulting damage. The exclusion of liability also extends to any service provided by third parties that were not commissioned by us in writing. Service exclusively by VOTRONIC Elektronik-Systeme GmbH, Lauterbach.

Notes:

Notes:

Technical Data:

Nominal Voltage:	12 V, 24 V
Operating Voltage Range:	8...32 V
Current Consumption:	1...40 mA, depending on illumination
Measuring Range:	-30...+70 °C
Measuring Scale:	0,1 °C
Display Unit (LCD Display):	
Technology:	LC Display with specific segments
Representation Surface:	49 x 28 mm
Illumination:	white LED
Dimensions (mm):	80 x 85 x 25
Assembly Dimensions Opening	
Electronic System (mm):	approx. 65 x 71
Weight:	approx. 70 g
Ambient Conditions, Humidity of Air:	max. 95 % RH, no condensation

Declaration of Conformity:
In accordance with the provisions of the statutory requirements and the relevant directives, Electrical Equipment (Safety) Regulations 2016, Electromagnetic Compatibility Regulations 2016, The Restriction of the Use of Certain Hazardous Substances in Electrical and Electronic Equipment Regulations 2012 this product complies with the following standards or normative documents:
BS EN55014-1; BS EN61000-6-1; BS EN61000-4-2; BS EN61000-4-3; BS EN61000-4-4; BS EN62368-1; BS EN50498, BS EN IEC 63000.

Declaration of Conformity:
In accordance with the provisions of Directives 2014/35/EU, 2014/30/EU, 2009/19/EC, this product complies with the following standards or normative documents:
EN55014-1; EN61000-6-1; EN61000-4-2; EN61000-4-3; EN61000-4-4; EN62368-1; EN50498.

The product must not be disposed of in the household waste.

The product is RoHS compliant. It complies with the directive 2015/863/EU for Reduction of Hazardous Substances in electrical and electronic equipment.

Disposal Concept:
At the end of its useful life, you can send us this device for professional disposal:
You can find more information about this on our website at **www.votronic.de/recycling**

Delivery Scope:
1 LCD Thermometer/Clock
1 Temperature Sensor 825
4 Fastening Screws
1 Installation and Operating Manual

Available Accessories:

Casing S	Order No. 2024
Temperature Sensor 825	Order No. 2001

Subject to misprints, errors and technical modification without notice.
All rights reserved. This material may not be published, broadcasted, rewritten or redistributed in whole or part without the express written consent of the manufacturer. Copyright © VOTRONIC 07/2025
Made in Germany by VOTRONIC Elektronik-Systeme GmbH, Johann-Friedrich-Diehm-Str. 2, 36341 Lauterbach/GERMANY
Phone.: +49 (0)6641/91173-0; Fax: +49 (0)6641/91173-10; E-Mail: info@votronic.de; Internet: www.votronic.de